REVISION RECORD			
LTR	ECO NO:	APPROVED:	DATE:
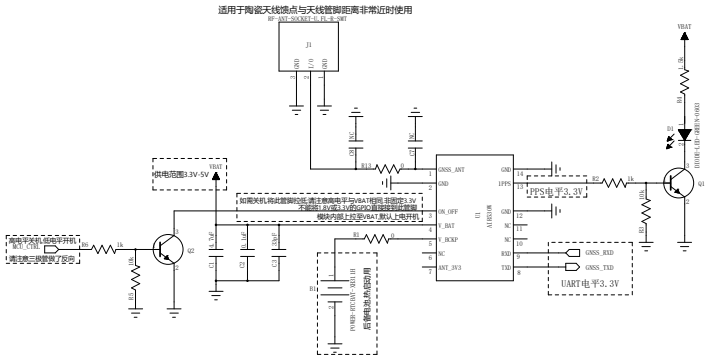
Air530W无源天线参考设计